ANKARA SERAMiK

www.
ankaraseramik
.com

24 kV 4500A
Outdoor Transformer Bushing

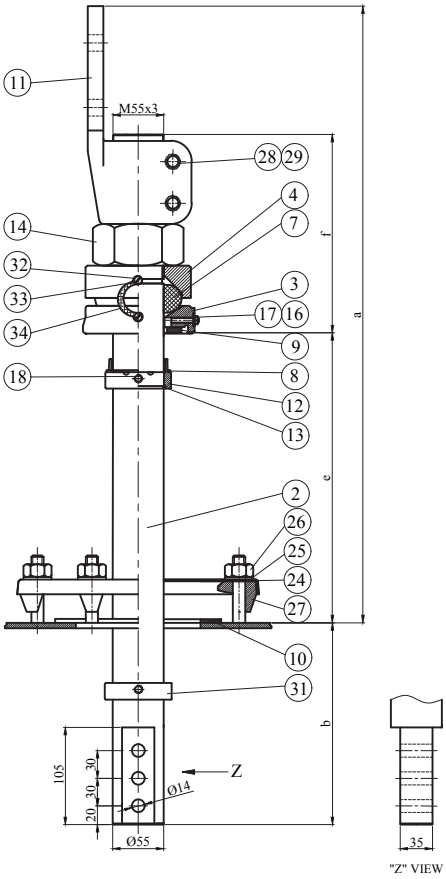

Insulation Levels acc. to IEC 60137:2017		
1	Highest Voltage (kV)	24
2	Rated Current (A)	4500
3	Lightning Impulse Withstand Voltage (BIL) (kV)	125
4	Power Frequency Withstand Voltage (kV)	dry 55 wet 50
5	Creepage Distance (mm)	-
6	Rated Thermal Short-time Current (2s) (kA)	70,71
7	Rated Dynamic Current (kA)	250
8	Minimum Cantilever Withstand Load (N)	3150

***All dimensions are "mm"

Type	a	b	e	f
20 Nf 4500	679	221	314	215

n* 6 fixing studs steel M12x55 (not supplied with the kit) Bolt circle 200 mm

POS.	Type 20 Nf	NAME OF THE MATERIAL	DESCRIPTION
34	1	Connection	
33	2	Washer	
32	2	M6 Screw	
31	1	Polymeric Washer	
29	2	Screw M12	DIN 933
28	2	Washer M12	DIN 125
27	6	Alu-Clamping	DIN 42538
26	6	Nut M12	DIN 934
25	6	Washer M12	DIN 125
24	1	Fixing Ring	"D" DIN 42538
18	4	Set Screw	DIN 553 (M8x15)
17	1	Washer	
16	1	Brass Screw	
14	1	Brass Nut	M55x3 DIN 934-Ms
13	1	Copper Ring	
12	1	Pressure Ring	
11	1	Brass Flag	
10	1	Flange Gasket	
9	1	Plain Gasket	
8	1	Internal Gasket	
7	1	Sealing Ring Gasket	
4	1	Brass Disc	
3	1	Brass Cap	
2	1	Connecting Bolt	