Cable Box Bushing
12 kV - 400 A (Oil - Air)

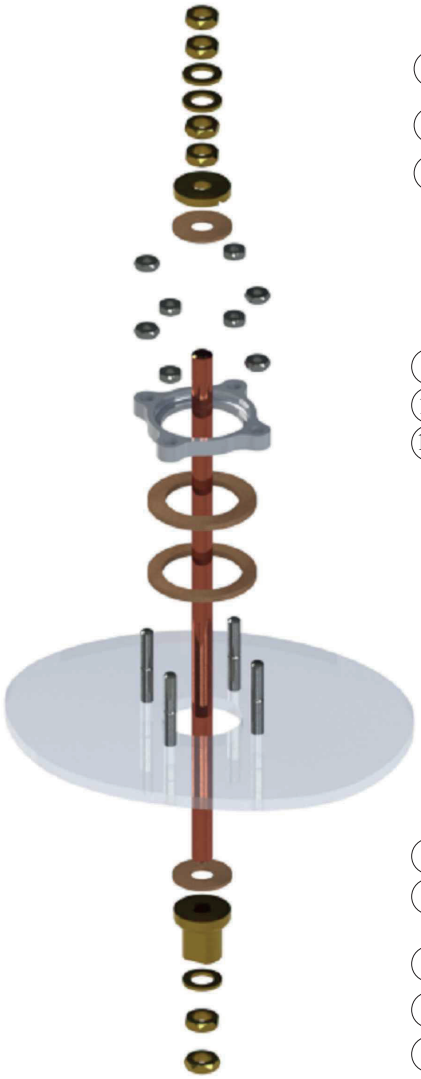

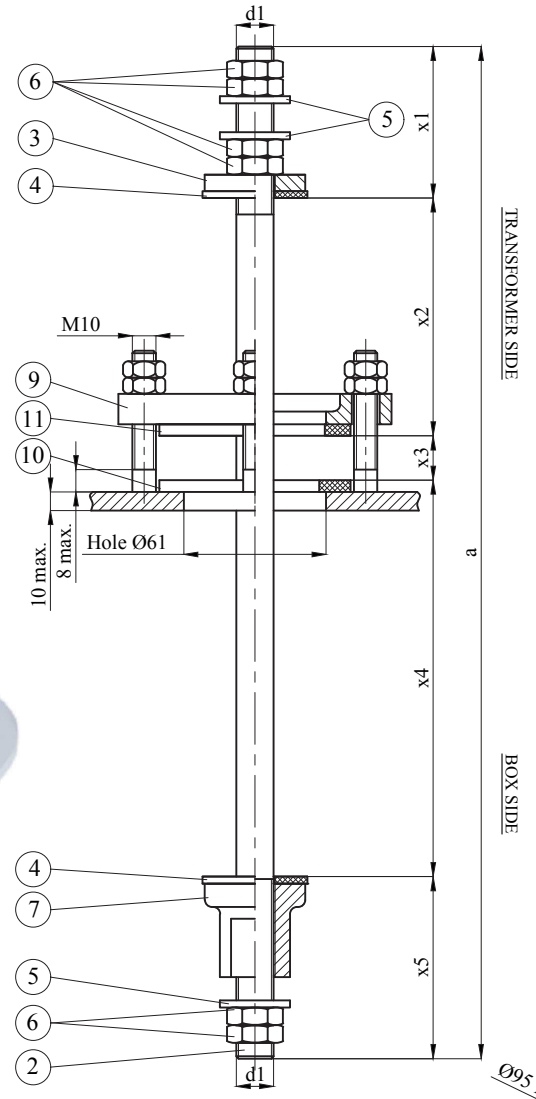

POS.	PCS.	DESCRIPTION
11	1	Flange Gasket
10	1	Flange Gasket
9	1	Fixing Ring (Aluminium)
7	1	Brass Closing Piece
6	6	Brass Lock Nut DIN 936
5	3	Brass Washer DIN 125
4	2	Gasket
3	1	Brass Locking Plate
2	1	Copper Stem

Insulation Levels acc. to IEC 60137:2017		
1	Lightning Impulse Withstand Voltage (BIL) (kV)	75

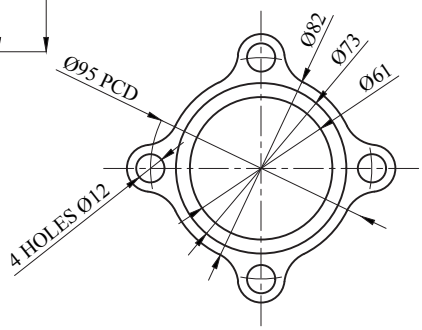

"Fixing Ring Details"

***All dimensions are "mm"

Type	Description	a	d1	x1	x2	x3	x4	x5
12 / 400A	Fixing Ring (Aluminium)	434	M16x2	65	102	19	170	78